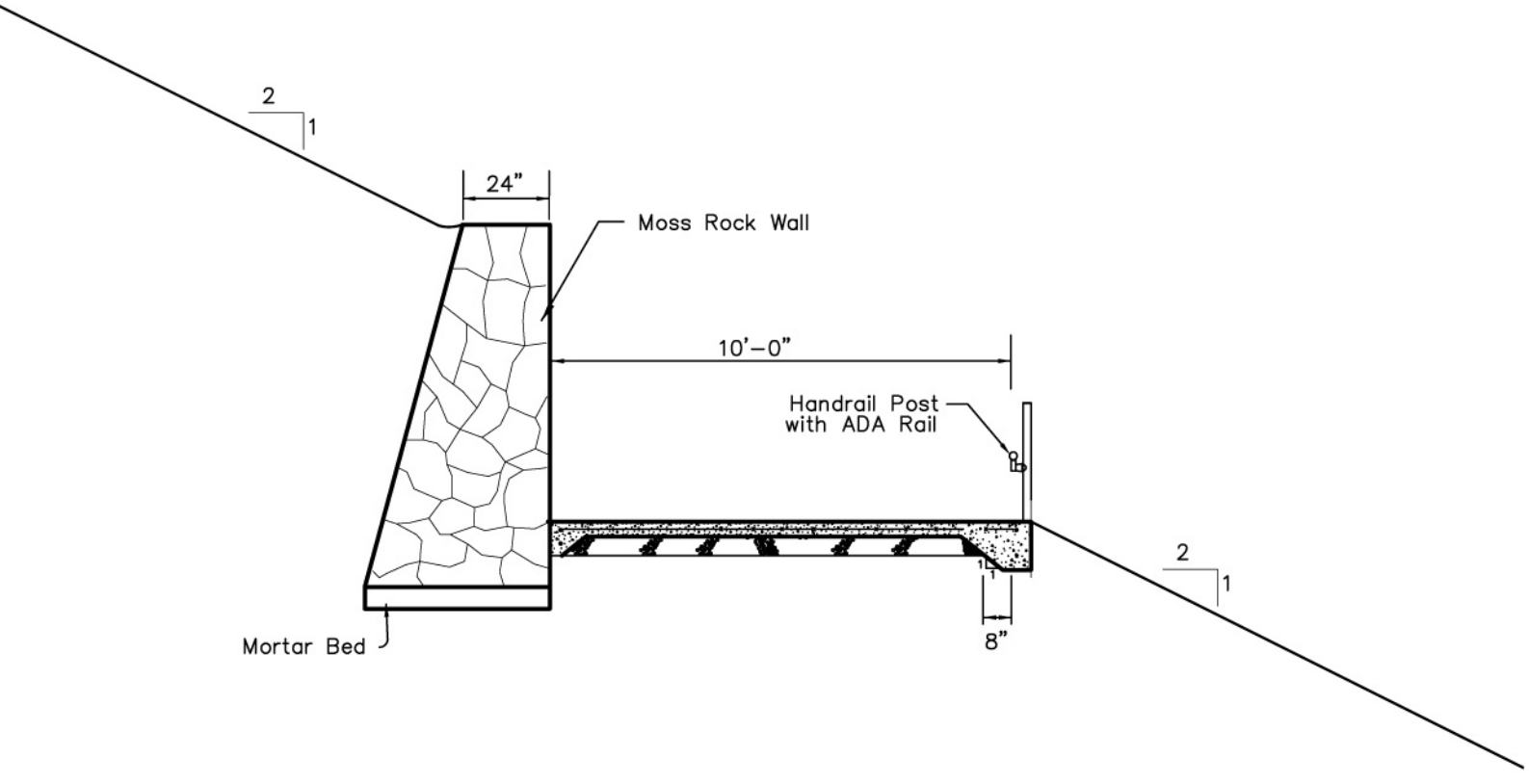

TYPICAL PATH WITH RETAINING WALL